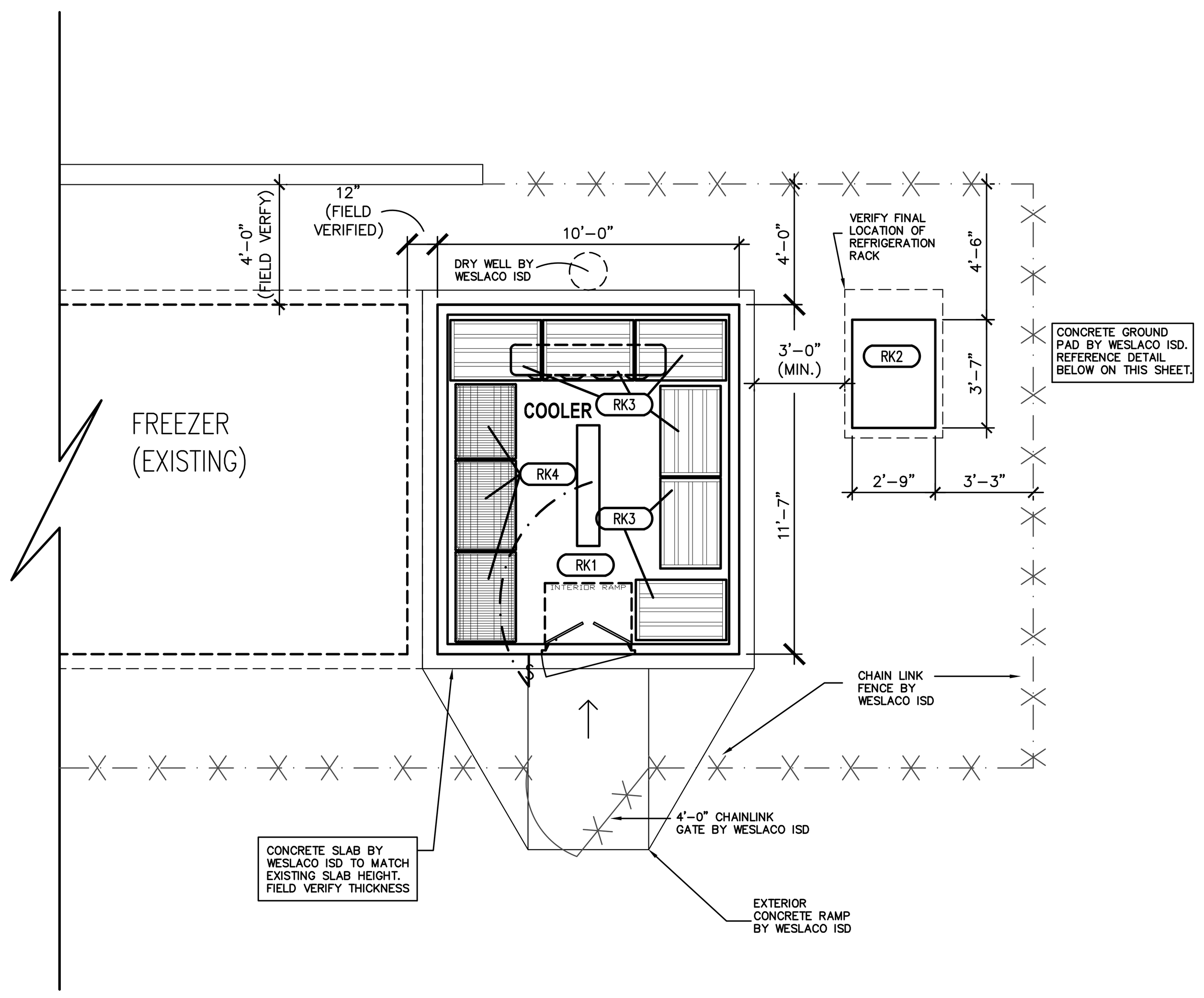

A / RFS.1 WALK-IN COOLER FLOOR PLAN

SCALE: 1/4"=1'-0"

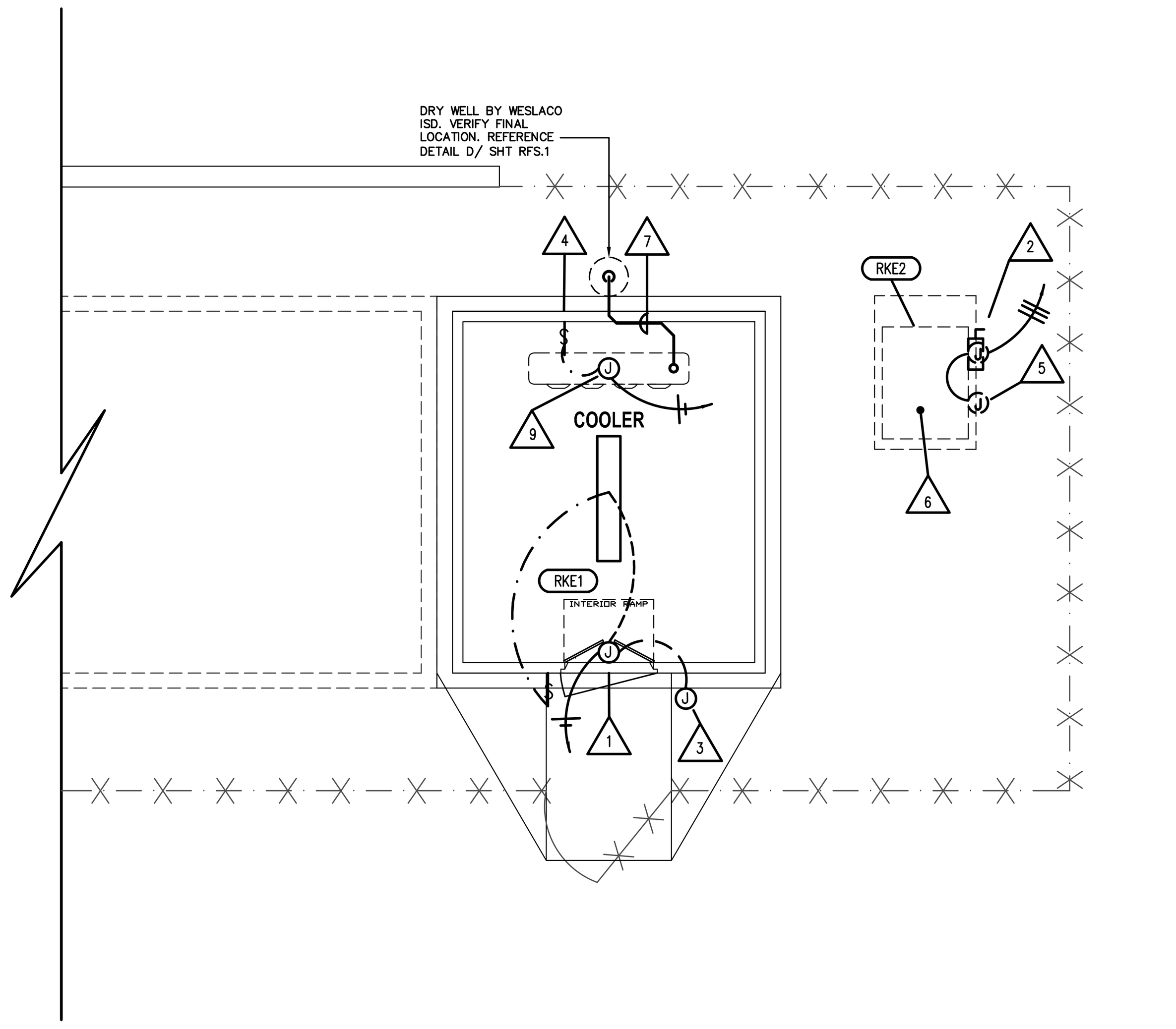

B / RFS.1 WALK-IN COOLER ELECTRICAL AND PLUMBING ROUGH-IN

SCALE: 1/4"=1'-0"

ELECTRICAL/PLUMBING ROUGH-IN NOTES

1. DOOR HEATERS, LIGHTS AND PRESSURE RELIEF PORTS PRE-WIRED TO JUNCTION BOX AT FRONT OF COLD STORAGE ASSEMBLY BY COOLER MANUFACTURER. FINAL CONNECTION BY ELECTRICIAN PROVIDED BY THE KITCHEN EQUIPMENT CONTRACTOR. SEE NOTE 3 BELOW.
2. MAIN FUSED ELECTRICAL DISCONNECT SWITCH IS TO BE PROVIDED AND PRE-MOUNTED ON THE UNIT BY THE REFRIGERATION SYSTEM MANUFACTURER. WESLACO ISD ELECTRICIAN IS TO PROVIDE AND INSTALL ANY ADDITIONAL ELECTRICAL DISCONNECT SWITCHES AND CIRCUITING FROM THE BUILDING POWER SUPPLY TO THE LOCATION OF THE NEW WALK-IN ASSEMBLY AS REQUIRED. FINAL ELECTRICAL CONNECTIONS TO THE REFRIGERATION SYSTEMS ARE TO BE PROVIDED BY A LICENSED ELECTRICIAN AS CONTRACTED BY THE KITCHEN EQUIPMENT CONTRACTOR.
3. WESLACO I.S.D. ELECTRICIAN IS TO PROVIDE CIRCUITING FOR 120V/60HZ/1PH/12 AMP DOOR HEATER AND LIGHTS FROM BUILDING POWER SUPPLY TO NEW WALK-IN LOCATION. CIRCUIT IS TO TERMINATE AT J-BOX LOCATED ON EXTERIOR OF WALK-IN. ALL FINAL CONNECTIONS ON INTERIOR OF WALK-IN ASSEMBLY AND REQUIRED PANEL PENETRATIONS ARE TO BE PROVIDED AND INSTALLED BY K.E.C.'S SUPPLIED ELECTRICIAN. ALL PENETRATIONS AND INTERIOR OF CONDUITS ARE TO BE PROPERLY SEALED.
4. K.E.C.'S LICENSED ELECTRICIAN IS TO PROVIDE AND INSTALL WEATHER PROOF SWITCH ON INTERIOR OF THE WALK-IN ASSEMBLY AND LOCATED BEHIND THE EVAPORATOR COIL FOR MEANS OF ELECTRICAL DISCONNECT TO THE EVAPORATOR.
5. CONTROL PANEL FOR REFRIGERATION RACK SYSTEM SUPPLIED BY KITCHEN EQUIPMENT CONTRACTOR. WESLACO I.S.D. IS TO PROVIDE 208V/60HZ/3PH 9.1 AMP TOTAL CONNECTED LOAD CIRCUIT FROM BUILDING POWER SUPPLY TO THE CONDENSING UNIT. WESLACO I.S.D, IS TO COORDINATE WITH KITCHEN EQUIPMENT CONTRACTOR FOR ALL REQUIREMENTS AND FINAL LOCATIONS. FINAL ELECTRICAL CONNECTION TO THE REFRIGERATION RACK IS TO BE PROVIDED BY THE K.E.C.'S LICENSED ELECTRICIAN.
6. WESLACO ISD CONSTRUCTION DEPARTMENT TO VERIFY FINAL LOCATION AND INSTALL 6" HIGH RAISED RAISED CONCRETE PAD FOR REFRIGERATION RACK. VERIFY AND PROVIDE ALL CLEARANCES PER THE SUBMITTED MANUFACTURER'S REQUIREMENTS
7. K.E.C.'S PLUMBING CONTRACTOR IS TO PROVIDE AND INSTALL 1" INSULATED COPPER CONDENSATE DRAIN LINE COMPLETE WITH P-TRAP FROM EVAPORATOR COIL TO THE DRY WELL ON THE EXTERIOR OF THE WALK-IN ASSEMBLY. ENTIRE CONDENSATE DRAIN LINE IS TO BE PROPERLY INSULATED WITH APPROVED ARMAFLEX INSULATION.
8. KITCHEN EQUIPMENT CONTRACTOR SHALL PROVIDE A LICENSED ELECTRICIAN FOR ALL FINAL ELECTRICAL CONNECTIONS ON INTERIOR OF WALK-IN ASSEMBLIES. ALL PANEL PENETRATION AND SEALING OF CONDUITS AND PENETRATIONS IS TO BE PROVIDED BY THE KITCHEN EQUIPMENT CONTRACTOR (K.E.C.). ALL CIRCUITING RUNS FROM THE BUILDING TO THE WALK-IN ASSEMBLY LOCATION ARE TO BE PROVIDED AND INSTALLED BY LICENSED TRADES AS SUPPLIED BY THE WESLACO INDEPENDENT SCHOOL DISTRICT (OWNER).
9. WESLACO I.S.D. IS TO PROVIDE AND INSTALL A DEDICATED CIRCUIT FROM THE BUILDING POWER SUPPLY TO THE LOCATION OF THE 120V/60HZ/1PH 1.8 AMP COOLER EVAPORATOR COIL. CIRCUIT IS NOT INCLUDED IN CONTROL PANEL LISTED IN NOTE 5. PANEL PENETRATION IN THE WALK-IN ASSEMBLY AND FINAL ELECTRICAL CONNECTION TO THE EVAPORATOR COIL ARE TO BE PROVIDED BY THE K.E.C.'S LICENSED ELECTRICIAN.
10. KITCHEN EQUIPMENT CONTRACTOR SHALL PROVIDE A LICENSED ELECTRICIAN FOR ALL FINAL ELECTRICAL AND CONTROL WIRING CONNECTIONS TO THE REFRIGERATION RACK CONDENSING UNIT FROM THE CIRCUIT PROVIDED BY WESLACO I.S.D. THAT IS TO BE LOCATED WITHIN 12" FROM THE REFRIGERATION RACK LOCATION.

PROFESSIONAL MEMBER JAMES G. COSPER FCSI 701113 FOODSERVICE CONSULTANTS SOCIETY INTERNATIONAL 05-10-2017

KITCHEN EQUIPMENT LISTING

ITEM	QUANTITY	DESCRIPTION	EQUIPMENT SPECIFICATIONS: MANUFACTURER	DIMENSIONS W.	D.	H.	ITEM	ELECTRICAL DATA – SPECIFICATIONS: AMPS	WATT	KW	CFM	HP	POWER REQ'D.: VOLT	CYC.	PH.	ROUGH-IN LOCATION: A.F.F.	IN WALL	STUB UP	CONNECTIONS: ▲	Ⓙ	⏀	$	REMARKS	PLUMBING/GAS/STEAM CONNECTIONS: CW	HW	D	H.D.	FS	GAS	CFH	STEAM	P.S.I.	ROUGH-IN LOCATION: WATER	DRAIN
RK1	1	WALK-IN COOLER	THERMO KOOL	120"	139"	102"	1	12	–	–	–	–	120	60	1	VERIFY WITH MANUFACTURER	–	Y	–	Y	–	Y	DOOR HEATER/LIGHTS/PRESSURE RELIEF PORT TO BE CIRCUITED TO SINGLE POINT CONNECTION	–	–	1"	–	–	–	–	–	–	–	BTC
RK2	1	REFRIGERATION RACK	RDT	33"	43"	35"	2	9.1	–	–	–	–	208	60	3	24"	Y	–	–	Y	–	–	PROVIDE 120V/1PH/1.8 AMP DEDICATED CIRCUIT FOR CLR EVAP COIL EVAPORATOR COIL/GROUND PAD BY WESLACO I.S.D.	–	–	1"	–	–	–	–	–	–	–	BTC
RK3	LT	DUNNAGE RACK	NEW AGE	AS PER PLANS			3	–	–	–	–	–	–	–	–	24"	–	–	–	–	–	–	FIELD MEASURE PRIOR TO ORDERING	–	–	–	–	–	–	–	–	–	–	–
RK4	LT	SHELVING UNIT	INTERMETRO INDUSTIRES – METRO MAX	AS PER PLANS			4	–	–	–	–	–	–	–	–	–	–	–	–	–	–	–	FOUR TIERS / FIELD MEASURE PRIOR TO ORDERING	–	–	–	–	–	–	–	–	–	–	–

NOTE: BTC DENOTES BRANCH INDIRECT DRAIN LINE TO NEAREST CONNECTION. (DRY WELL, FLOOR SINK, FLOOR DRAIN ETC.)

MODEL NO. ZS1-1 OUTDOOR AIR COOLED REFRIGERATION SYSTEM

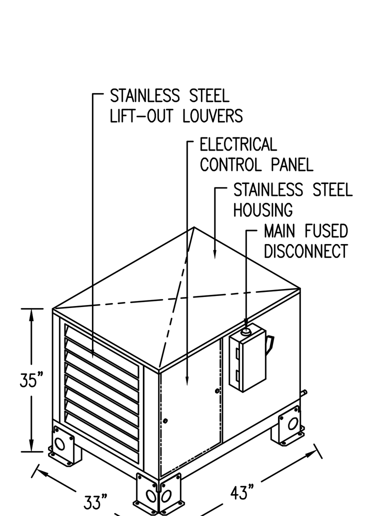

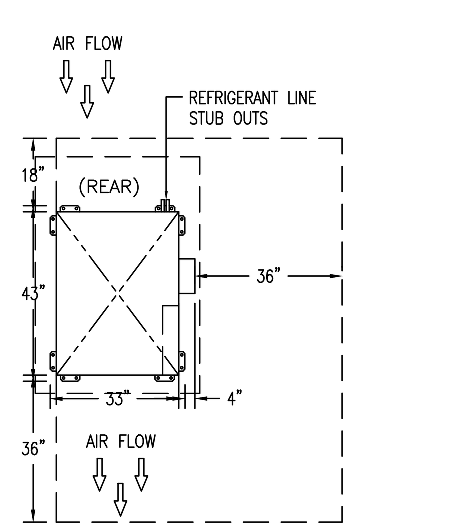

NOTE: MINIMUM CLEARANCE REQUIRED FOR PROPER OPERATION

NOTE: GROUND PAD CAN BE SAME SIZE AS OUTDOOR UNIT

SUPPLIED WITH:
- FAN CYCLING
- CRANKCASE HEATERS

WEIGHTS

RACK WEIGHT: 345 LBS.
EVAPORATOR WEIGHT: 49 LBS.
TOTAL EQUIPMENT WEIGHT: 394 LBS.

No.	Revision/Issue	Date
0	ORIGINAL ISSUE	3-17-17

rdt **ENGINEERING SUMMARY**

POWER SUPPLY: 208-230/60/3
CONNECTED LOAD: 9.1 AMPS

MAX FUSE SIZE: 15 AMPS
MINIMUM CIRCUIT AMPACITY: 11.4

SYSTEM	ITEM #	FIXTURES: DESCRIPTION	TEMP FIXT.	TEMP SUCT.	REFRIG. R-	COMPRESSORS: MODEL NO.	H.P.	RATING @ 60 Hz RLA	V	PH	BTU CAP. @ 105°F AMBIENT	TYPE	CONDENSER	EVAPORATOR COILS: MODEL NO.	QTY.	FAN MOTORS @ 60 Hz RLA	V	PH	HEATERS @ 60 Hz RLA	V	PH	DEFROST TYPE	TOTAL SYSTEM LOAD	DEFROST CLOCK	REFRIGERANT LINE SIZES (100' MAX LINE RUN) SUCT.	LIQ.	ACCESSORIES: THERMOSTAT	VALVE	TXV
A	–	WALK-IN COOLER	35	25	407A	ZS09KAE	1.3	9.1	208	3	10100	Z	L1R	ADT-104	1	1.8	115	1	–	–	–	O.C.	9.1	KE2TEMP	7/8	3/8	F	F	F
														ALL WALK-IN COILS POWERED THROUGH A HOUSE CIRCUIT															

UL LISTED FINAL ASSEMBLY

NOTE: IT IS THE INSTALLING CONTRACTORS RESPONSIBILITY TO FOLLOW ALL APPLICABLE CODES AND CURRENT REFRIGERATION INDUSTRY STANDARDS AND PRACTICES WHEN DETERMINING LINE SIZES, AND INSTALLING AND STARTING UP RDT EQUIPMENT.

COMPRESSOR TYPE
S SEMI-HERMETIC
H HERMETIC
Z SCROLL

DEFROST TYPE
O.C. OFF CYCLE
ELEC ELECTRIC

EVAPORATOR ACCESSORIES
F FACTORY EQUIPPED
L LOOSE (FIELD INSTALLATION)
O PROVIDED BY OTHERS

C / RFS.1 WALK-IN COOLER REFRIGERATION DETAIL (ITEM RK2)

N.T.S.

NOTE: WESLACO I.S.D. IS TO PROVIDE AND INSTALL ALL REQUIRED ELECTRICAL CIRCUITING TO THE LOCATION OF THE NEW WALK-IN ASSEMBLY AND WITHIN A MAXIMUM OF 6 FEET FROM THE TERMINATION POINTS AND/OR FINAL CONNECTIONS ON THE EQUIPMENT. THE DRY WELL REQUIRED FOR CONDENSATE DRAINAGE IS TO BE PROVIDED AND INSTALLED BY THE WESLACO I.S.D.

ALL FINAL PLUMBING AND ELECTRICAL CONNECTIONS TO THE EQUIPMENT ARE TO BE PROVIDED BY A LICENSED ELECTRICIAN AND PLUMBER AS CONTRACTED BY THE KITCHEN EQUIPMENT CONTRACTOR (K.E.C.).

1. OWNER (W.I.S.D.) IS TO FURNISH & INSTALL CONCRETE/ PLATFORM LEVEL IN BOTH DIRECTIONS.

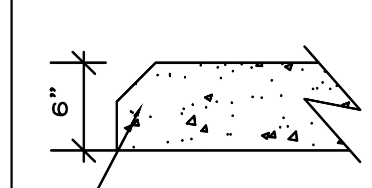

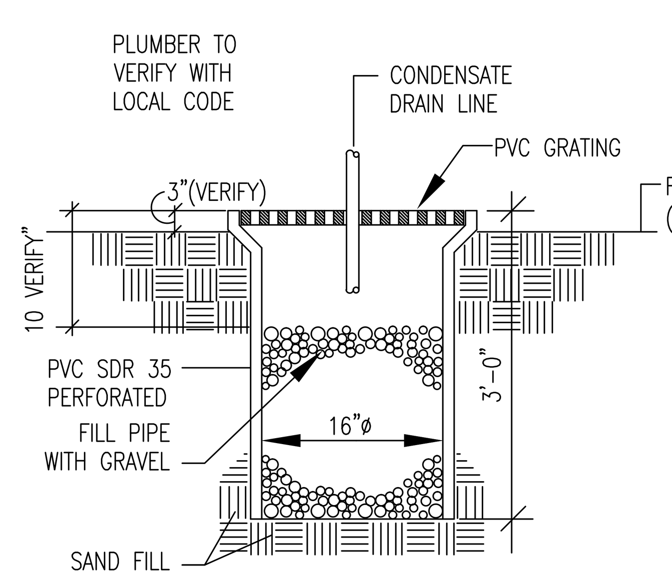

D / RFS.1 DRY WELL DETAIL

N.T.S.

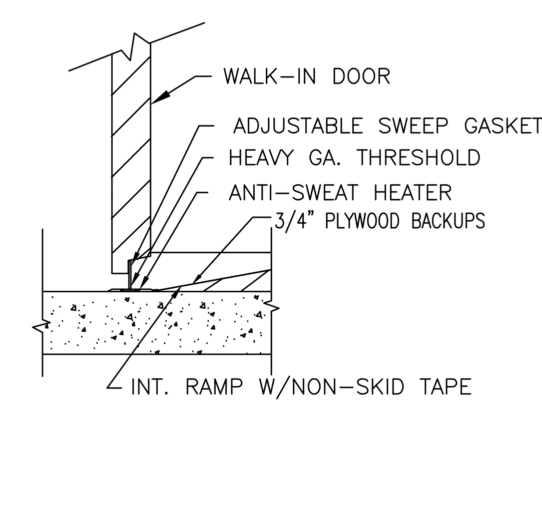

SECTION THRU DOOR

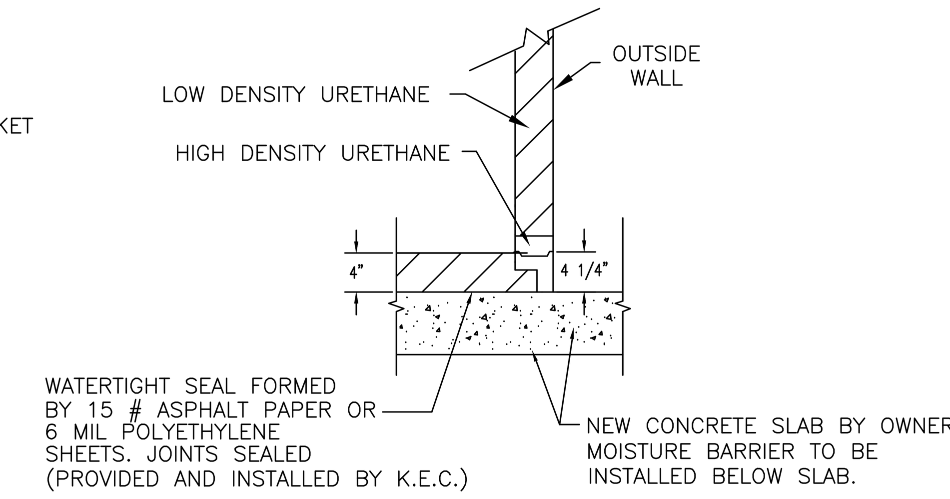

SECTION THRU OUTSIDE WALL

E / RFS.1 WALK-IN COOLER FLOOR DETAILS

NOT TO SCALE

A.N. TONY RICO

COSPER & ASSOCIATES, INC.
13061 #3 HWY. 181 SAN ANTONIO, TEXAS 78223
PHONE: 210-633-2020 FAX: 210-633-2028

Walk-In Cooler Addition to
A.N. Tony Rico Elementary School
Weslaco Independent School District
2202 N. International Bridge Blvd.
Weslaco, Texas 78596

DRAWN BY: J.P.
CHECKED BY: J.C.

SHEET TITLE
WALK-IN COOLER PLAN

REVISIONS:

DATE DRAWN : 05-10-2017

RFS.1